Metalworking Solutions Supplied

Morgan Rushworth HSGS NC Hydraulic Swing Beam Guillotines

The Morgan Rushworth HSGS range of hydraulic swing beam guillotines are of a robust design and are finished to a very high standard. They are equipped with a high visibility front blade guard, consisting of a fixed guard with viewing windows. All machines are fitted with D2 stainless steel quality cutting blades as standard, giving the flexibility to cut a broad range of materials without detriment to blade life. The user friendly touch screen Cybtouch 6 NC controller ensures accurate cutting with precise backgauge setting and also has the facility to store complete cutting lists including length and quantity. For lengths longer than the backgauge travel, an automatic swing away backgauge is standard.

Machine Features

- CybTouch 6 NC Controller
- Fast and powerful backgauge with 750mm travel
- Automatic swing away backgauge feature
- Stainless steel cutting blades with multiple cutting edges
- Cutting line illumination with shadow wire
- Cutting length stroke adjustment for narrower sheets reducing cutting time
- Digital stroke counter
- Easy blade gap adjustment system from single point
- Powerful hydraulic material hold downs prevent sheet sliding during cutting
- Front guards with windows for excellent visibility of cutting area
- Support table with roller bearings
- 1000mm front squaring arm with tee slot and flip stop
- Front support arms with 1000mm length
- Foot pedal available for single or continuous cutting
- Rear photo-cell guards

HSGS RANGE

PICTURED WITH OPTIONAL FRONT LIGHT FINGER GUARD

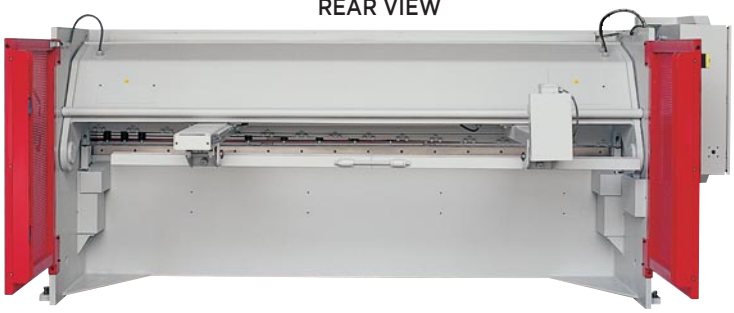

REAR VIEW

Optional Equipment

- 1000mm backgauge travel in lieu of standard
- Powered blade gap adjustment
- Pneumatic rear sheet support system
- Tee slot, flip stop & rule on front support arms
- Angle gauge
- 1 metre lift up finger guard with interlock switch
- Front CE light guards in lieu of standard fixed front guards
- Longer squaring arms and support arms

CYBTOUCH 6 TOUCHSCREEN NC CONTROLLER

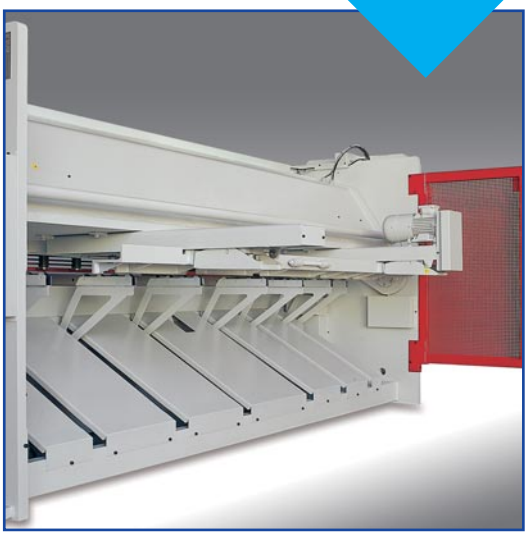

OPTIONAL PNEUMATIC REAR SHEET SUPPORTS

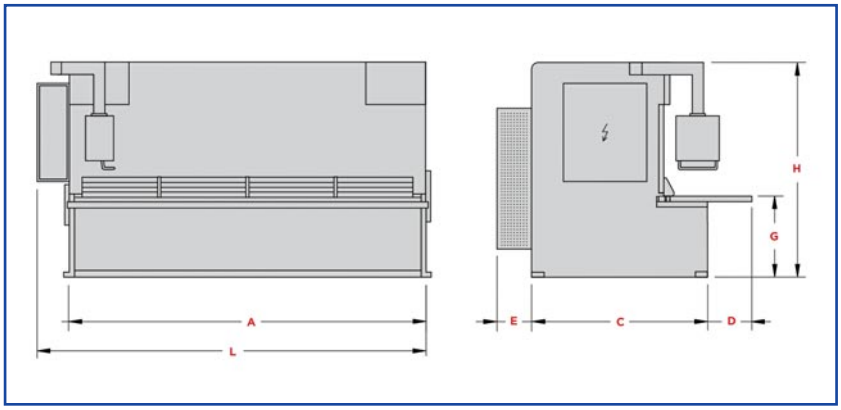

OPTIONAL POWERED BLADE GAP ADJUSTMENT

TECHNICAL SPECIFICATIONS

MODEL	STOCK CODE	CUTTING LENGTH mm	CUTTING CAPACITY (45 kg/mm²)	CUTTING CAPACITY (70 kg/mm²)	CUTTING ANGLE	STROKES PER MINUTE	No. OF HOLD DOWNS	MAIN MOTOR kw	BACKGAUGE MOTOR kw	BACKGAUGE TRAVEL mm	OIL CAPACITY lt	TABLE LENGTH A mm	TABLE HEIGHT G mm	TRANSPORT WIDTH C mm	MACHINE WIDTH C+E mm	LENGTH L mm	WIDTH C+D+E mm	HEIGHT H mm	WEIGHT kg
HSGS 2600/6 NC	M1057	2560	6	4	1.6	24	15	11	0.37	750	160	2760	800	1260	2460	3190	2940	1570	4670
HSGS 3100/6 NC	M1058	3060	6	4	1.6	20	17	11	0.37	750	160	3260	800	1320	2520	3690	3000	1570	5450
HSGS 3100/8 NC	M1059	3060	8	5	1.8	13	17	15	0.37	750	160	3305	800	1450	2650	3735	3130	1650	6380
HSGS 3700/6 NC	M1060	3660	6	4	1.2	18	20	11	0.37	750	160	3965	800	1450	2650	4395	3130	1650	7300
HSGS 4100/6 NC	M1061	4060	6	4	1.2	12	23	11	0.37	750	160	4305	900	1560	2760	4735	3190	1750	9150